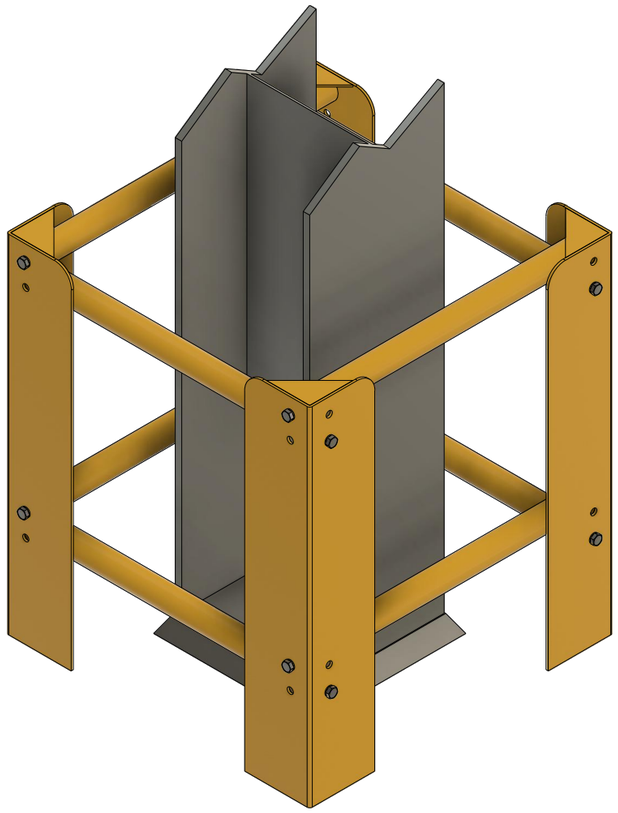

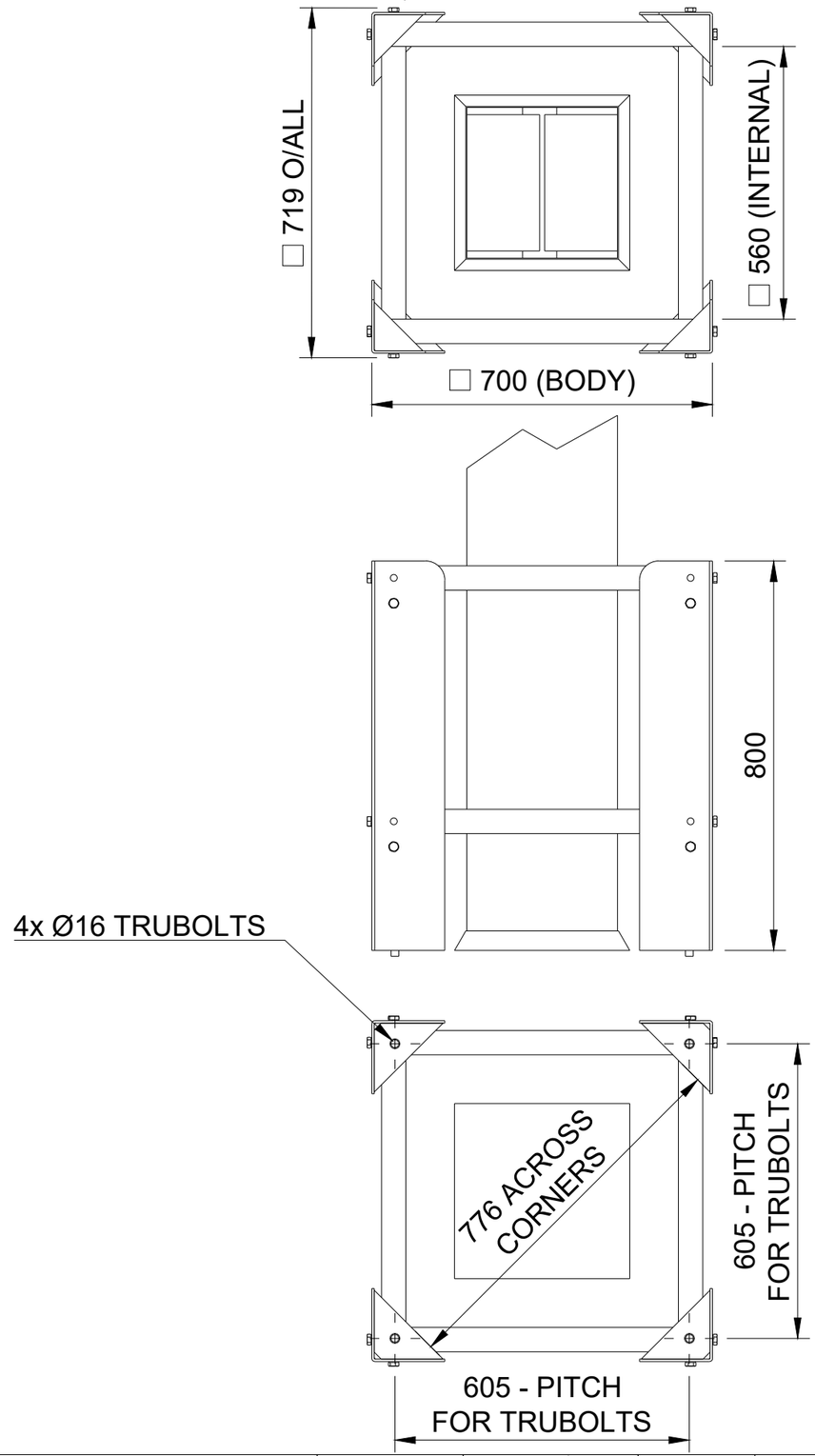

CellTec engineering automation safety

ZONE Safety Systems

sales@celltec.com.au
www.celltec.com.au
www.zonesystems.com.au
© COPYRIGHT 2021 - CELLTEC PTY LTD
NO PART OF THIS DRAWING MAY BE REPRODUCED, STORED IN A RETRIEVAL SYSTEM IN ANY FORM, OR TRANSMITTED BY ANY MEANS WITHOUT PRIOR WRITTEN PERMISSION OF CELLTEC PTY LTD

U.N.O Dimensions are in MM

Tolerances
0 ± 1.0mm
0.0 ± 0.5mm
0.00 ± 0.1mm

Status:

Scale: 1:10
Date: 22/06/2023
Revision Date:

Engineer
Designer: Robert Buttigieg
Approved
Revision No:

Client: CP-700

Project/Quote Number:
Drawing Number:
Page: 1/2
A3